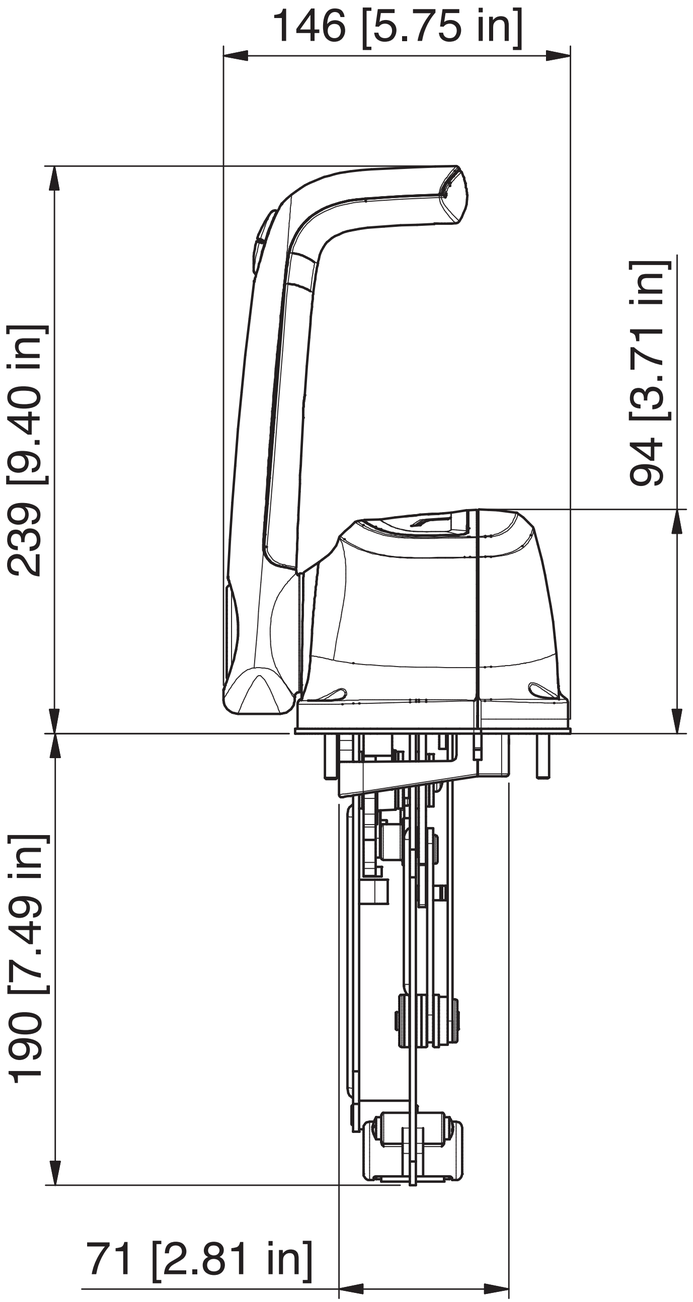
146 [5.75 in]
239 [9.40 in]
94 [3.71 in]
190 [7.49 in]
71 [2.81 in]

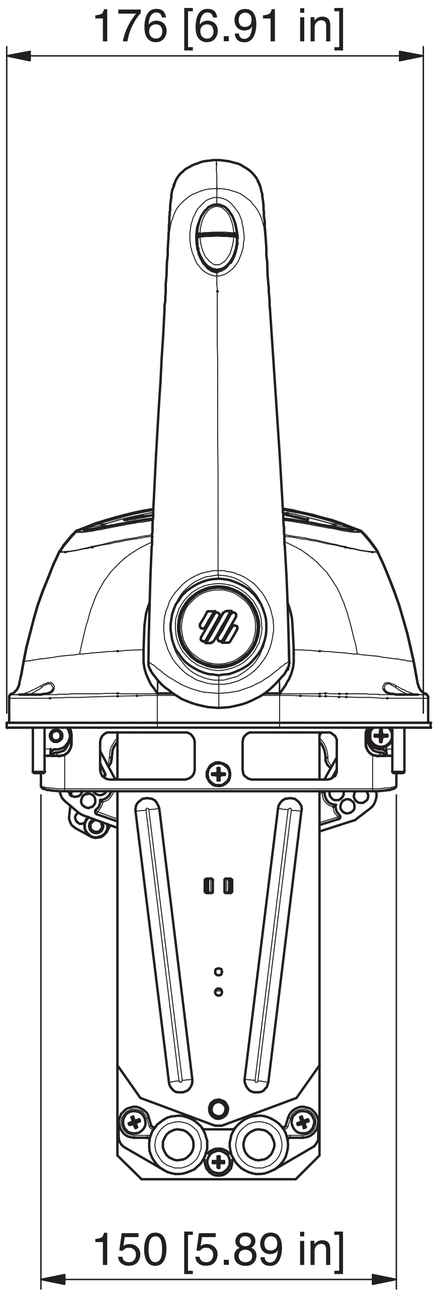
176 [6.91 in]
150 [5.89 in]