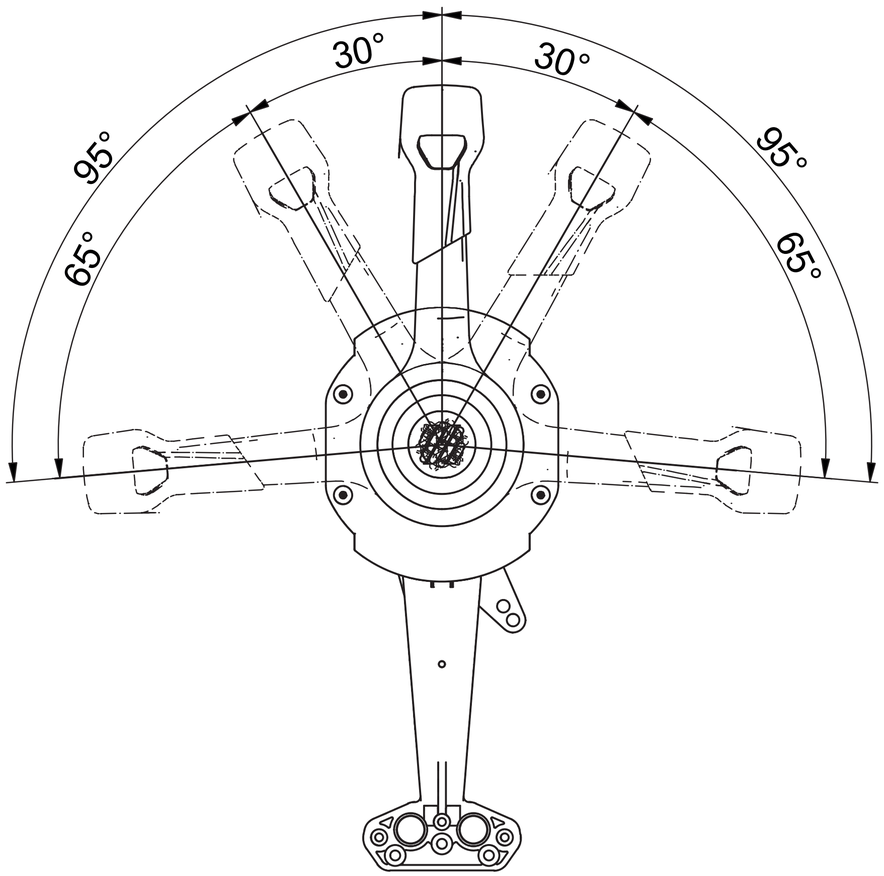
30°
30°
95°
95°
65°
65°

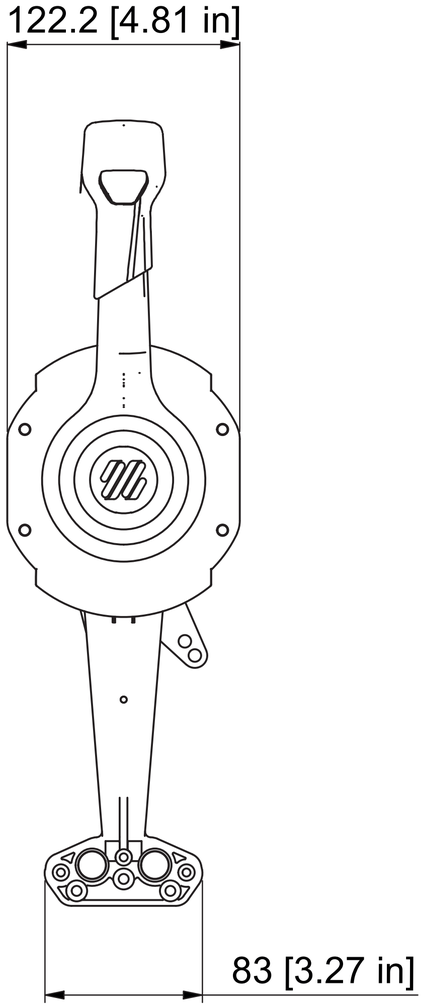
122.2 [4.81 in]
83 [3.27 in]

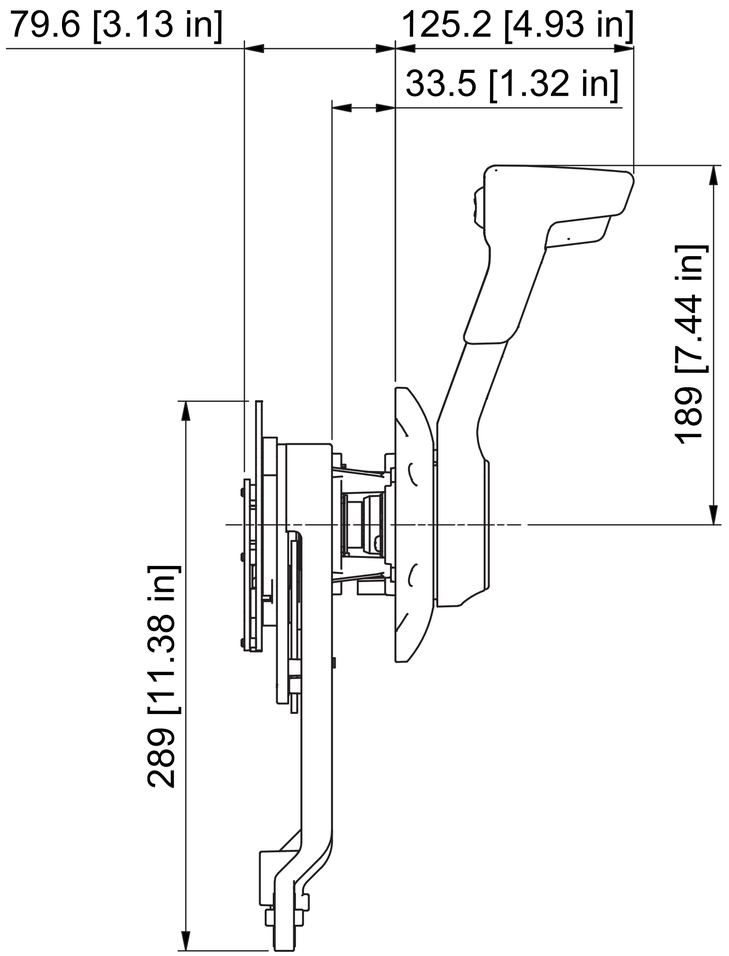
79.6 [3.13 in]
125.2 [4.93 in]
33.5 [1.32 in]
189 [7.44 in]
289 [11.38 in]